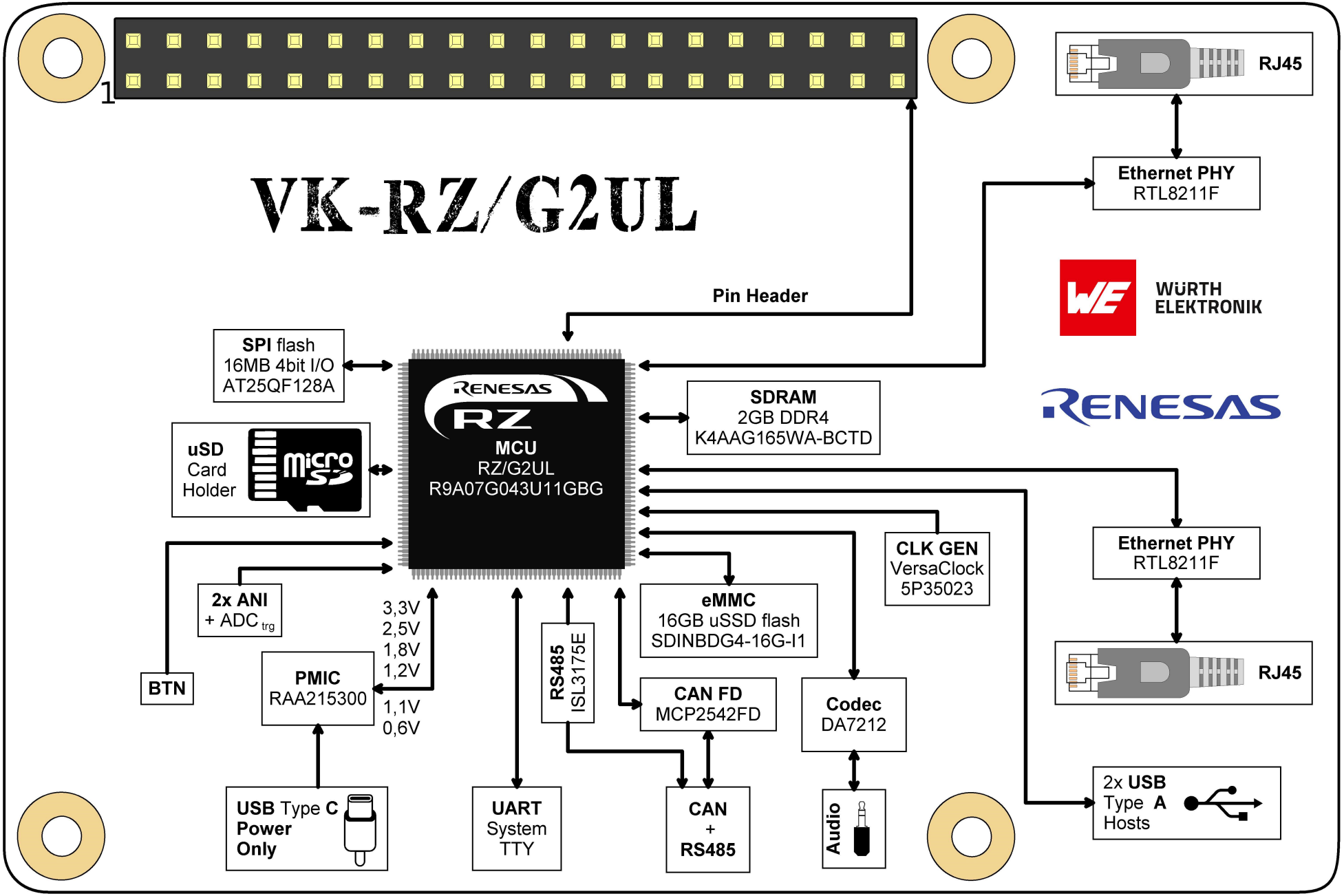
VK-RZ/G2UL
1
Pin Header
RJ45
Ethernet PHY
RTL8211F
WÜRTH
ELEKTRONIK
RENESAS
SPI flash
16MB 4bit I/O
AT25QF128A
uSD
Card
Holder
micro SD
RENESAS
RZ
MCU
RZ/G2UL
R9A07G043U11GBG
SDRAM
2GB DDR4
K4AAG165WA-BCTD
CLK GEN
VersaClock
5P35023
Ethernet PHY
RTL8211F
2x ANI
+ ADC trg
3,3V
2,5V
1,8V
1,2V
1,1V
0,6V
eMMC
16GB uSSD flash
SDINBDG4-16G-I1
RJ45
BTN
PMIC
RAA215300
RS485
ISL3175E
CAN FD
MCP2542FD
Codec
DA7212
USB Type C
Power
Only
UART
System
TTY
CAN
+
RS485
Audio
2x USB
Type A
Hosts