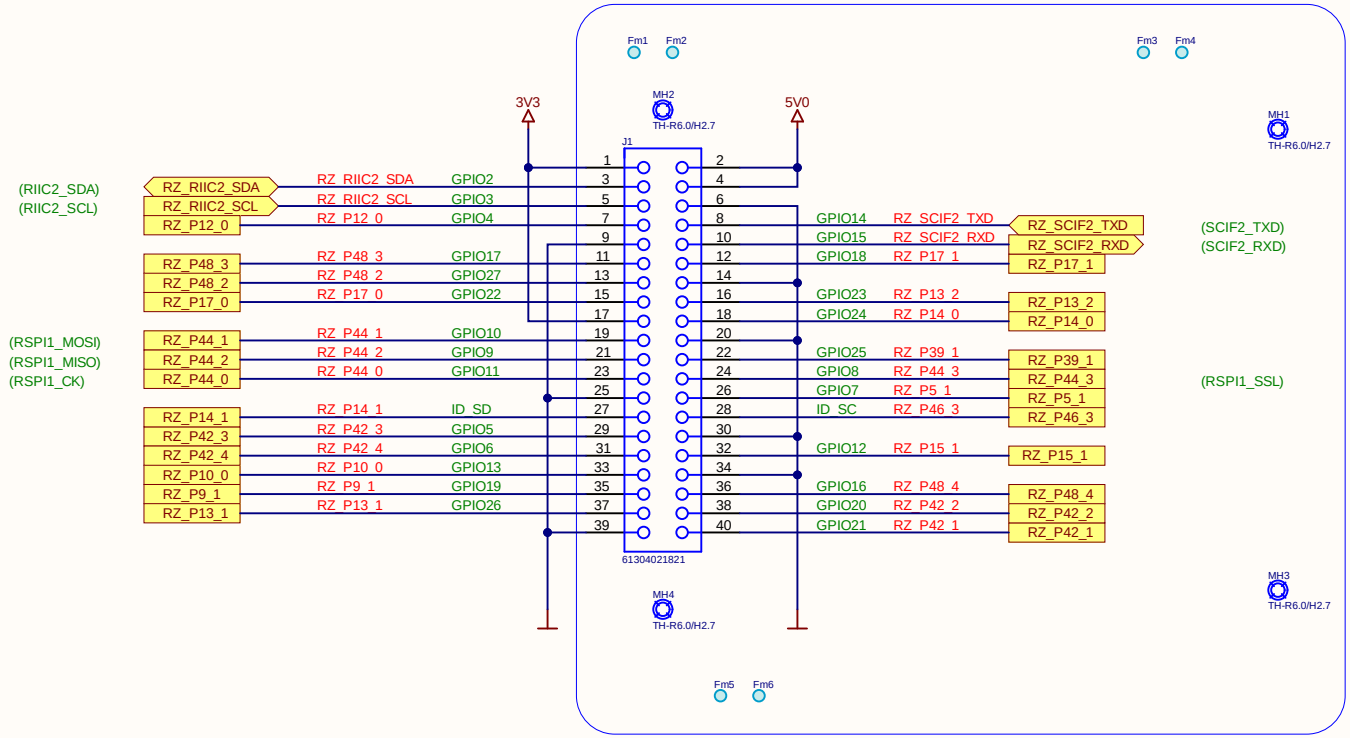

Title		
Size A4	Number	Revision
Date: 10.13.2023		Sheet of
File: D:\Projects\..\PiHatExp.SchDoc		Drawn By: